Infinity
BATHROOM LINE

INFINITY SHOWER TRAY INSTALLATION GUIDE

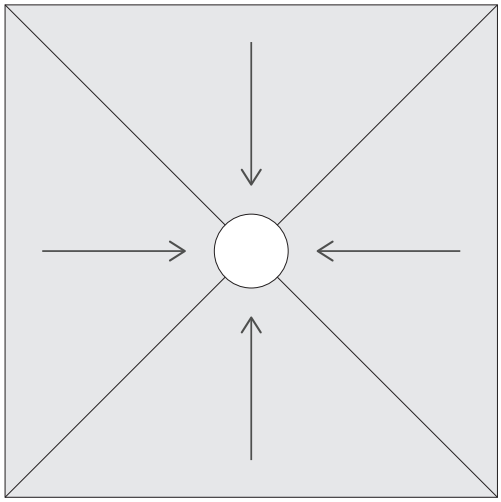

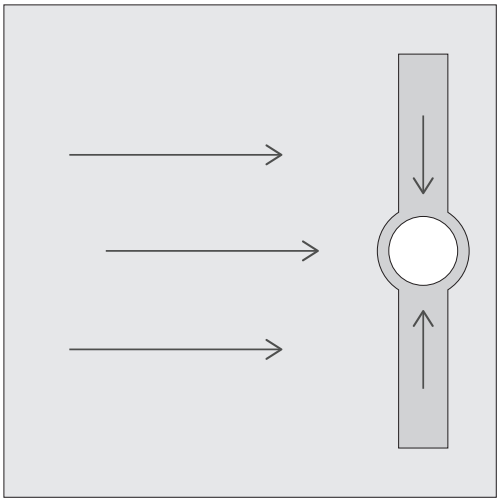

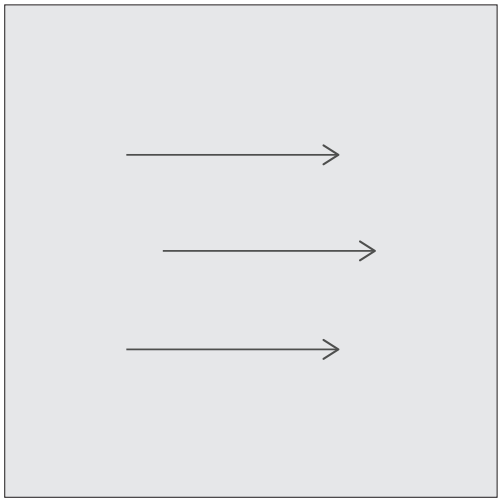

Important Note: Both AS3740 and The BRANZ Good Tiling practices guide stipulate the floor flange should be installed to fit unobstructed by, or flush with the tray surface. This then becomes a requirement for BRANZ appraised membrane systems. If in doubt seek advice from your membrane supplier prior to product installation.

INFINITY SHOWER BASE INSTALLATION INSTRUCTIONS

These instructions are provided as a helpful guide to installing your Infinity shower base.
Please ensure you pass this copy to your Tiler / Installer to ensure trouble free and correct installation. The seller will not be held responsible for improper installation or specific jobsite conditions.
NB: this product is suitable for floor grade tiles 100mmx100mm and larger.

1. PREPARATION

a) Clean and prepare the floor area for the shower base.

b) Substrate preparation must be completed to meet or exceed New Zealand building code requirements. This includes filling any voids/gaps in the substrate or around floor flange setting (See Fig 1.1).

c) Plumber to firmly fit the floor flange for infinity tray installation (we recommend Allproof products installed per supplier recommendation).

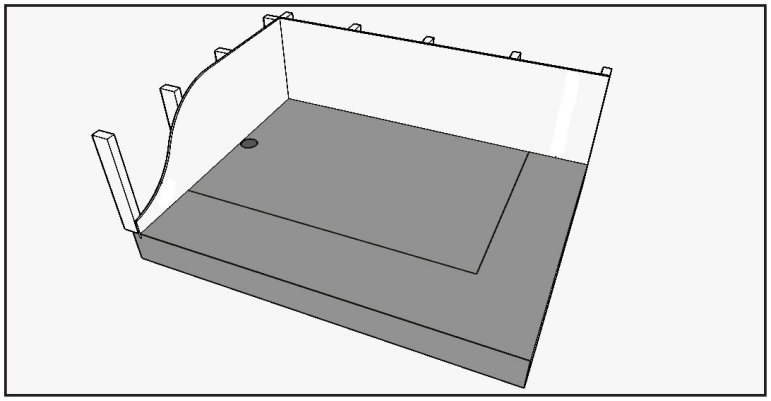

Fig. 1.1: Preparation of the floor substrate.

2. DRY FIT

a) Dry fit base into place & cut base to fit as required for shower door placement.

b) Mark outside of the base with a pencil to set gluing area.

c) Check if base is level.

d) Clean and prime your substrate

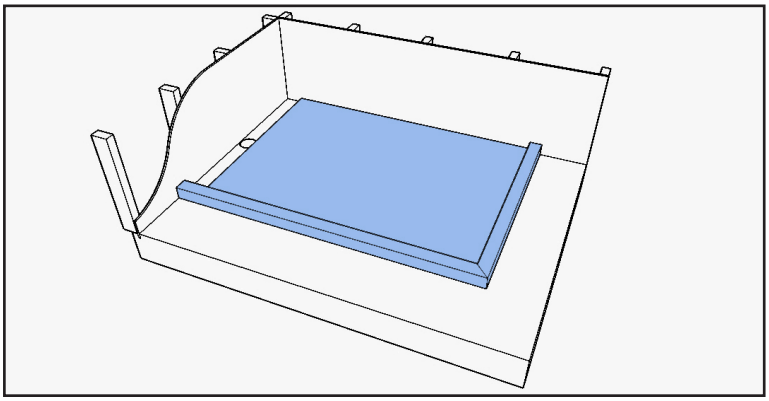

Fig. 2.1: Dry fit base into place & cut to fit as required for shower door placement.

NB: Showerwell Shower Standard Size Setout

We recommend using Showerwell shower glass and accessories. Please see the next page for the correct setout per shower size - this is the measurement from the inner edge of the hob (where

2a. SHOWERWELL SHOWER SET OUT

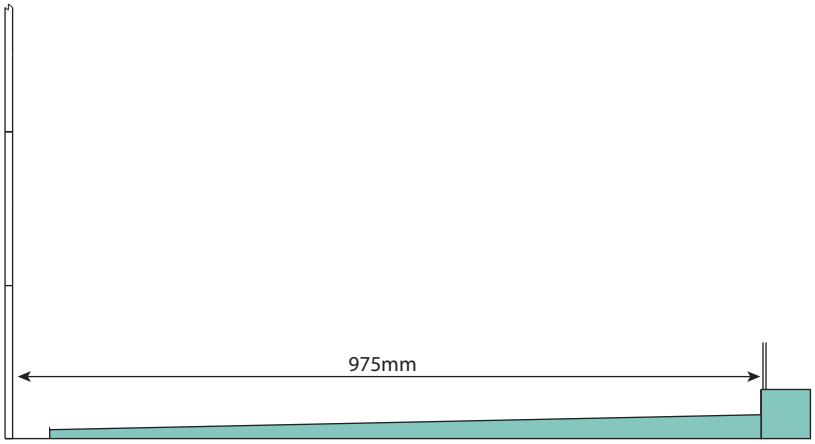

Glass Position on Hob to Tile Face = 975mm
(To fit 1000x1000mm Showerwell shower doors)

900x900mm Nominal Door Size = 875mm x 875mm Setout
1200x1200mm Nominal Door Size = 1175mm x 1175mm Setout
900x1200mm Nominal Door Size = 875x1175mm Setout
* Trim tray to to suit your shower door requirements. If in doubt, contact your shower supplier.

*If glass placement is in the centre of the hob, a Waterstop may be detailed on the exterior edge of the hob by the specifier and/or local council body requirements. Please check installation detail.

NB: Cutting the Tray

Infinity shower trays can be cut to suit your shower door requirements. These should be checked prior to install.

We recommend using a professional utility knife, hand saw or grinder with dust extraction.

3. INSTALLING THE FLOOR FLANGE (INFINITY CENTRE TRAY)

The Infinity pre formed centre tray range presents the benefit of a dual installation option ensuring product adaptability pending building code, designer and site requirement.

a) Option 1 (Best practice): The tiler or plumber are to install the Infinity tray per the below process but also bed/lock the tray into place with the floor flange installed flush into the tray surface recess (See Fig 3.1) ensuring connection to sub floor drainage per required plumbing standards and best practice.

Fig. 3.1: Floor Flange set into the recessed top of the Central Tray

b) Option 2: Specifier acceptance recommended. Install the Infinity centre tray following the process below outlined from Point 4 onward. Cutting the tray to fit neatly around the floor flange or to fit neatly over if deemed an acceptable solution by the construction specifier.

Please note Point 4 presents two adhesive options. Tile adhesive can be used for concrete, screed or cement sheets floors. Bonding to or of plumbing fittings must be completed using the correct tubed construction adhesive.

It is important to ensure all waterproofing requirements are carried out by a certified applicator. Ensuring all membrane, primer, detailing and installation requirements are followed. We advocate the use of a butyl floor flange ensuring a smooth well bonded bond breaker detail.

If glass placement is in the centre of the hob, a Waterstop may be detailed on the exterior edge of the hob by the specifier and/or local council body requirements. Please check installation detail.

NB: Cutting the Tray

Infinity shower trays can be cut to suit your shower door requirements. These should be checked prior to install. We recommend using a professional utility knife, hand saw or grinder with dust extraction.

4. BONDING THE TRAY (INFINITY SLOPED TRAY AND CENTRE TRAY)

First prime the floor area. Adhering of the base can be completed using one of two methods:

a) Apply a solvent free polystyrene friendly construction adhesive such as Sikaflex®-123 MS Bond to the marked floor area. Adhesive should be applied in a zigzag format with a generous bead – this is to prevent any potential air pockets forming under the base. (See Fig. 4.1)

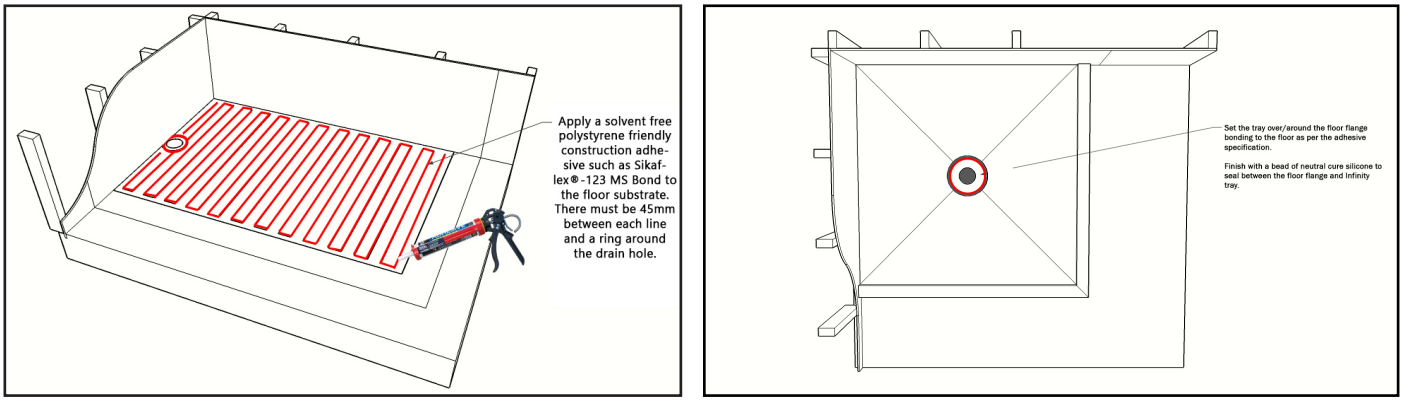

Fig. 4.1: Adhesion of the base using a solvent free polystyrene friendly construction adhesive such as Sikaflex®-123 MS Bond.

or

b) Bed the Tile tray using a cement based, polymer fortified adhesive. Ensure to both notch and back butter. If the floor is not level, use extra adhesive or levelling compound to compensate for variation. (See Fig. 4.2)

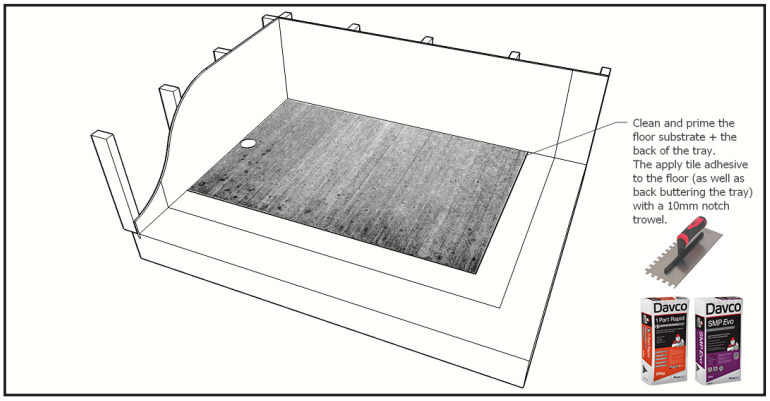

Fig. 4.2: Adhesion of the base using a Cement based, polymer fortified adhesive and a notch trowel.

5. BONDING THE TRAY (INFINITY LINEAR TRAY)

First prime the floor area. Adhering of the base can be completed using one of two methods:

a) Lightly sand the stainless steel area on the back of the tray and apply a solvent free polystyrene friendly construction adhesive such as Sikaflex®-123 MS Bond to the marked floor area. Adhesive should be applied in a zigzag format with a generous bead – this is to prevent any potential air pockets forming under the base. (See Fig. 5.1)

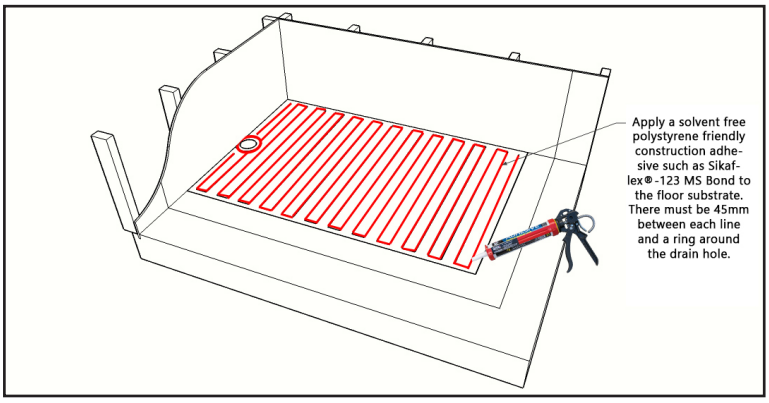

Fig. 5.1: Adhesion of the base using a solvent free polystyrene friendly construction adhesive such as Sikaflex®-123 MS Bond.

or

b) Lightly sand the stainless steel area on the back of the tray and apply a solvent free polystyrene friendly construction adhesive such as Sikaflex®-123 MS Bond to the stainless steel area (See Fig. 5.2). Bed the rest of the tile tray using a cement based, polymer fortified adhesive. Ensure to both notch and back butter. If the floor is not level, use extra adhesive or levelling compound to compensate for variation. (See Fig. 5.3)

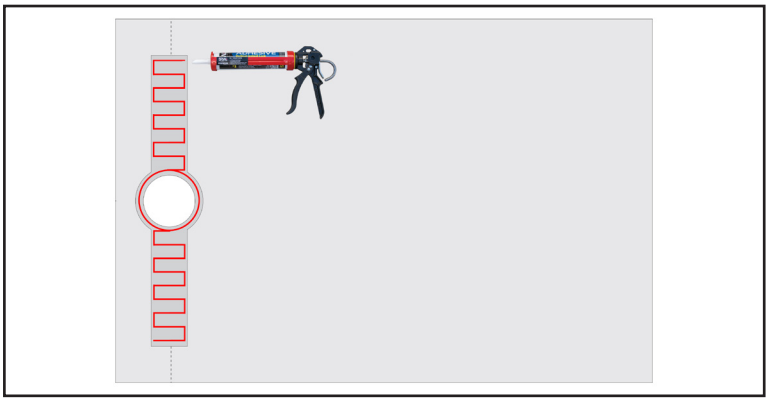

Fig. 5.2: Adhesion of the stainless steel using a solvent free polystyrene friendly construction adhesive such as Sikaflex®-123 MS Bond.

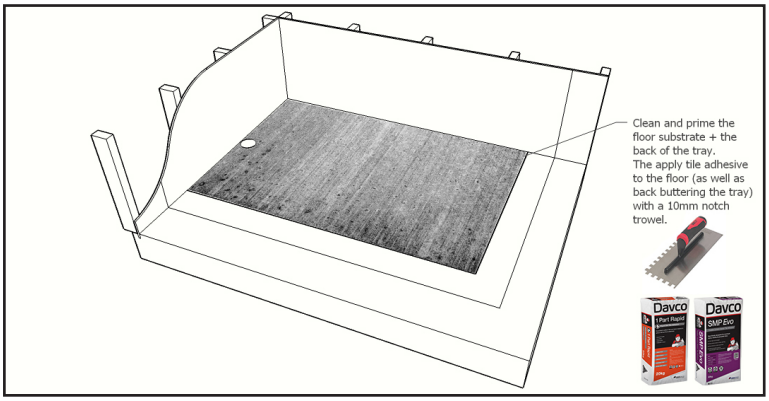

Fig. 5.3: Adhesion of the rest of the base (not including the stainless steel area) using Cement based, polymer fortified adhesive and a notch trowel.

6. FITTING AND CURING

a) Once the adhesive bed is applied, fit the base back into place and press firmly over the entire surface ensuring 100% coverage. Weight the base and check level again before leaving to cure. (See Fig. 6.1)

b) Leave weighted for at least 4 hours to ensure adequate adhesion is achieved. Full curing of the adhesive can be up to 24 hours pending climate conditions (option to heat the room to desired temp)

c) At no stage should the tiling or waterproofing be applied until the Infinity Shower Base is correctly installed and adhesive cured.

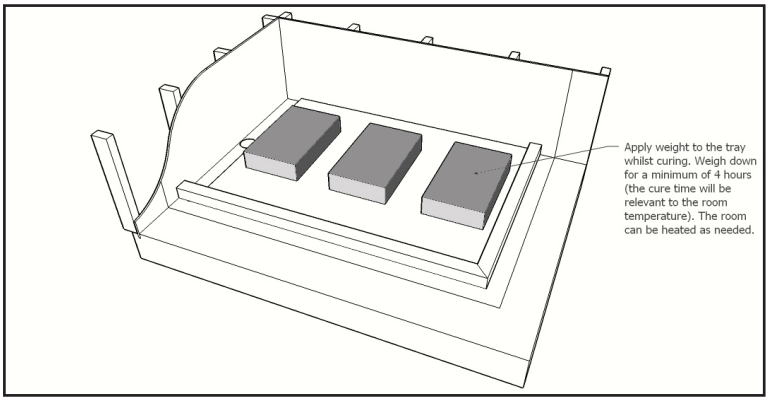

Fig. 6.1: Apply weights to the base whilst the adhesive cures.

7. WATERPROOFING

a) Etch prime the floor flange prior to priming and waterproofing. Apply waterproofing membrane according to the manufacturer's instruction (with correct bond breaker).

b) Ensure waterproofing is applied to both wall and floor finishing heights as per local council body requirements. (See Fig. 7.1)

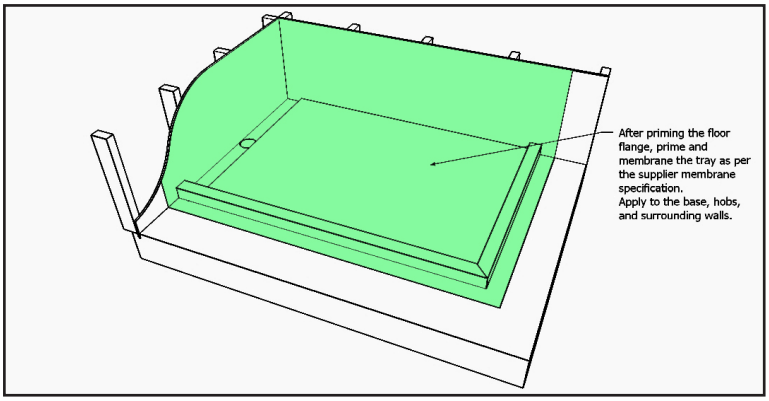

Fig. 7.1: Waterproofing of the main base.

d) Ensure the waterproofing returns up the inside vertical face of the hob, across the top edge, down the floor line and on the outside of the tile over shower base. (Note your council may require the remaining bathroom floor to be waterproofed also). (See Fig. 7.1)

e) Ensure waterproofing is applied well down into the leak control flange/puddle flange. (minimum 10mm).

8. CHANNEL/CENTRAL DRAIN WASTE

a) Once the waterproofing has cured, install and tile the channel waste as per the 'INFINITY INSTALLATION GUIDE CHANNEL'.